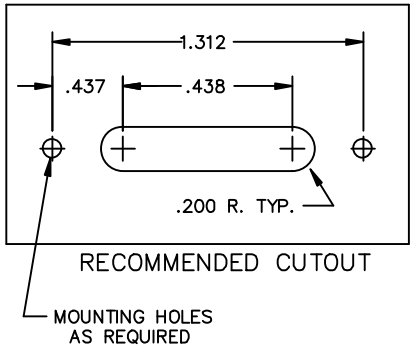

RECOMMENDED CUTOUT

NOTES:

1) VOLTAGE: 100 VDC.
2) CURRENT: 20 AMPS.
3) OPERATING TEMPERATURE: −55°C TO +105°C.
4) MATERIAL: BLACK THERMOPLASTIC OR EQUIV.
5) SCREW TYPE: #6−32 PHILSLOT HD.
6) MARKING: 4 PT. CHARACTERS, WHITE INK.
7) CAPACITANCE: 2500pF MIN./ 5200pF MAX.
8) GROUND PLANE IS TO BE FLAT WITHIN .012".
9) SHIPPING TRAY LABEL MARKING:
   SCI 52−160−002−A DATE CODE
   100V, 20A, 12−22AWG
   UL & CSA LOGOS

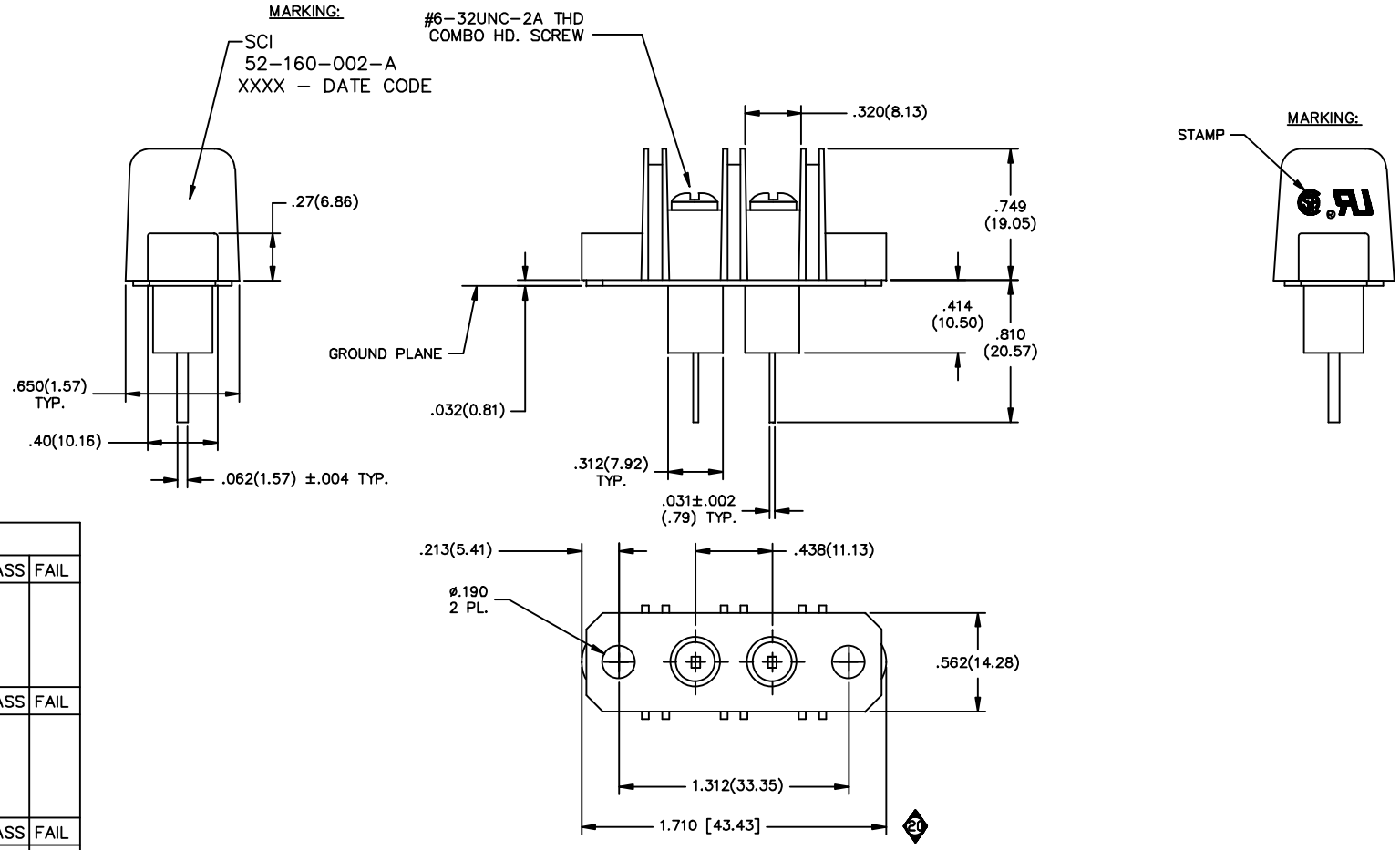

TEST SEQUENCE				
STEP 0400	94−4033−00	VISUAL/MECH.	PASS	FAIL
PER IT 38−0468 INSPECT DIMENSIONS AND WORKMANSHIP. PER MIL−STD−105, LEVEL II, 1%AQL COMMENTS: 100%		OPER:		
STEP 0100	94−1002−00	CAP./D.F.	PASS	FAIL
PER IT 38−0245 CAP: 2500pF TO 5200pF DF. ≤4% MAX COMMENTS: 100%		OPER:		
STEP 0200	94−2005−00	DWV	PASS	FAIL
PER IT 38−0245 DWV: 2000 VDC 25°C 1 MINUTE MINIMUM COMMENTS: 100%		OPER:		
STEP 0300	94−2015−00	I.R.	PASS	FAIL
PER IT 38−0245 IR: 100VDC, 1000 Mohms MIN. 2 MINUTES MAX. COMMENTS: 100%		OPER:		

REV. NO.	CHANGE NOTICE
20	CN 49611−ENG
19	CN 46305−ENG
18	CN 201630
17	CN 199163 REDRAWN

UNLESS OTHERWISE SPECIFIED DIMENSIONS ARE IN INCHES. (MILLIMETERS)

DO NOT SCALE.

TOLERANCES UNLESS OTHERWISE SPECIFIED
Fractions± 1/64
Dec. .xx± .03
Dec. .xxx±.020
Angles ±0° 30′
CODE IDENT. NO. OLSP2

SPECTRUM CONTROL INC.
FAIRVIEW PENNSYLVANIA

Dwn. KAUFFMAN
Date 8−03−09
Apvd.
Sheet 1 of 1

Description: FILTER TERMINAL BLOCK

52−160−002−A

Quality Products From The Specialists In Electro−Magnetic Compatibility